OPEN
Industry Standard, Flexible Architecture

GREEN
Less Heat, Less Power Consumption

STABLE
Robust Design, Quality Parts

Stable and
Reliable Solution

Server/Workstation
Motherboard

6U8M-TURIN2 SYN MI325X

User Manual

English

Version 1.04
Published Nov. 2025
Copyright©2025 ASRock Rack Inc. All rights reserved.

Copyright Notice:

No part of this documentation may be reproduced, transcribed, transmitted, or translated in any language, in any form or by any means, except duplication of documentation by the purchaser for backup purpose, without written consent of ASRock Rack Inc.

Products and corporate names appearing in this documentation may or may not be registered trademarks or copyrights of their respective companies, and are used only for identification or explanation and to the owners' benefit, without intent to infringe.

Disclaimer:

Specifications and information contained in this documentation are furnished for informational use only and subject to change without notice, and should not be constructed as a commitment by ASRock Rack. ASRock Rack assumes no responsibility for any errors or omissions that may appear in this documentation.

With respect to the contents of this documentation, ASRock Rack does not provide warranty of any kind, either expressed or implied, including but not limited to the implied warranties or conditions of merchantability or fitness for a particular purpose.

In no event shall ASRock Rack, its directors, officers, employees, or agents be liable for any indirect, special, incidental, or consequential damages (including damages for loss of profits, loss of business, loss of data, interruption of business and the like), even if ASRock Rack has been advised of the possibility of such damages arising from any defect or error in the documentation or product.

This device complies with Part 15 of the FCC Rules. Operation is subject to the following two conditions:

(1) this device may not cause harmful interference, and
(2) this device must accept any interference received, including interference that may cause undesired operation.

CALIFORNIA, USA ONLY

The Lithium battery adopted on this server motherboard contains Perchlorate, a toxic substance controlled in Perchlorate Best Management Practices (BMP) regulations passed by the California Legislature. When you discard the Lithium battery in California, USA, please follow the related regulations in advance.
"Perchlorate Material-special handling may apply, see www.dtsc.ca.gov/hazardouswaste/perchlorate"

Setting up the Server in a Restricted Access Location/Restricted Access Area

- Access can only be gained by service persons or by users who have been instructed about the reasons for the restrictions applied to the location and about any precautions that shall be taken.
- Access is through the use of a tool or lock and key, or other means of security, and is controlled by the authority responsible for the location.
- Leave enough clearance (25 inches in the front and 30 inches in the back of the rack) to allow the front door to be opened completely and to allow for sufficient airflow.
- This product is for installation merely in a Restricted Access Location.
- This product is not suitable for use with visual display work place devices according to §2 of the the German Ordinance for Work with Visual Display Units.
- Only skilled person and Instructed person can remove the chassis covers to access the inside of the system.

ASRock Rack's Website: www.ASRockRack.com

Replaceable Batteries

CAUTION

RISK OF EXPLOSION IF BATTERY IS REPLACED BY AN INCORRECT TYPE.

DISPOSE OF USED BATTERIES ACCORDING TO THE INSTRUCTIONS

Warning

When removal of the chassis lid required for servicing:

- Turn off power and unplug any power cords/cables, and
- Reinstall the chassis lid before restoring power.

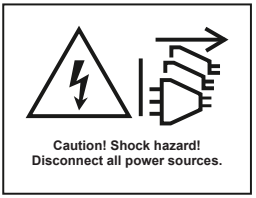

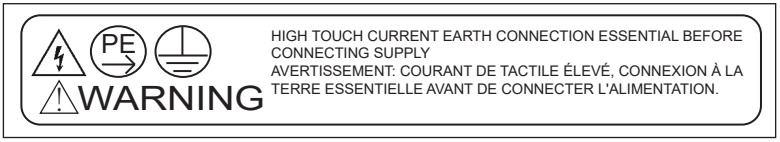

Important Safety Instructions

Pay close attention to the following safety instructions before performing any of the operation. Basic safety precautions should be followed to protect yourself from harm and the product from damage:

- Operation of the product should be carried out by suitably trained, qualified, and certified personnel only to avoid risk of injury from electrical shock or energy hazard.
- Disconnect the power cord from the wall outlet when installing or removing main system components, such as the server motherboard and power supply unit.
- Place the system on a stable and flat surface.
- Use extreme caution when working with high-voltage components.
- When handling parts, use a grounded wrist strap designed to prevent static discharge.
- Keep the area around the system clean and clutter-free.
- Keep all components and printed circuit boards (PCBs) in their antistatic bags when not in use.
- Handle a board by its edges only; do not touch its components, peripheral chips, memory modules or contacts.
- The power cord must be connected to a socket or outlet with a ground connection.

Contents

Chapter 1 Introduction **1**

1.1 Shipping Box Contents 2

1.2 Specifications 3

Chapter 2 Server System Overview **6**

2.1 System Components 6

2.2 Internal Features 7

2.3 System Front Panel 9

2.4 System Rear Panel 10

2.5 I/O Panel 11

2.6 LED 15

Chapter 3 Hardware Installation and Maintenance **18**

3.1 Server Top Cover 19

3.2 Hard Drive 23

3.3 Power Supply 25

3.4 System Fan 27

3.5 Add-in Card 29

3.6 GPU Tray 35

Chapter 4 Server Motherboard (TURIN2D24G-2L+/500W) **36**

4.1 Layout 36

4.2 Block Diagram 40

4.3 Installing the CPU and Heatsink (LGA 6096 Socket) 41

4.4 Installing the Memory Modules (DIMM) 46

Appendix **47**

Installing the Server in a Rack 47

Chapter 1 Introduction

Thank you for purchasing 6U8M-TURIN2 SYN MI325X, a reliable barebone system produced under ASRock Rack's consistently stringent quality control. It delivers excellent performance with robust design conforming to ASRock Rack's commitment to quality and endurance.

This guide provides the instructions of insertion and extraction of chassis components, such as chassis covers, system fans, power supplies, hard disk drive trays, and other main components this system supports. If the system is pre-installed a server motehhrboard, refer to the server motherboard user manual for the information of the server motherboard components, specifications and BIOS settings.

System	ASRock Rack Server Motherboard
6U8M-TURIN2 SYN MI325X	TURIN2D24G-2L+/500W

Because the hardware specifications might be updated, the content of this documentation will be subject to change without notice.

The illustrations shown in this manual are for reference purposes only and may not exactly match the model purchased.

If requiring technical support related to this system, please visit the website for specific information about the using model.
http://www.asrockrack.com/support/

1.1 Shipping Box Contents

Item	Quantity
Server barebone: 6U8M-TURIN2 SYN MI325X	1
CPU Heatsink	2
Rail Kit	1
Accessory Box - 8 Power Cords - 1 Quick Installation Guide - 2 Screws for M.2 Sockets	1

If any items are missing or appear damaged, contact the authorized dealer.

English

1.2 Specification

6U8M-TURIN2 SYN MI325X	
System	
Form Factor	6U Rackmount
Dimension	930 x 448 x 264.7mm (36.6" x 17.6" x 10.4")
Support MB	TURIN2D24G-2L+/500W
Front Panel	
Button	Power button w/ LED, reset button, NMI button, UID button w/ LED
LED	System fault LED, hard drive activity LED
I/O Port	2 RJ45 (1GbE) by Intel® i350, share with rear I/O 1 Dedicated IPMI, shares with rear I/O 4 Type-A (USB3.2 Gen1) 1 DB15 (VGA)
External Drive Bay / Storage	
Front Side Drive Bay	8 Hot-swap 2.5" NVMe (PCIe5.0 x4) drive bays from PCIe switch 4 Hot-swap 2.5" NVMe (PCIe5.0 x4) drive bays from CPU
Internal Side	1 M-key (PCIe3.0 x4 or SATA 6Gb/s), supports 22110/2280 form factor [CPU0] 1 M-key (PCIe3.0 x4 or SATA 6Gb/s), supports 22110/2280 form factor [CPU1]
Power Supply	
Type	6+2 CRPS
Output Watt	3002.4W @ 220-240Vac input 2900W @ 200-220Vac input
Efficiency	80-PLUS Titanium
AC Input	200-240Vrms, 50/60Hz
System Fan	
Fan	21 PWM 80x80mm fans

Processor System	
GPU	AMD Instinct™ MI325X platform with Infinity Fabric™ Links
CPU	Supports AMD EPYC™ 9005/9004 (with AMD 3D V-Cache™ Technology) and 97x4 series processors
Socket	Dual Socket SP5 (LGA 6096)
Thermal Design Power	Up to 500W
Chipset	System on chip
System Switch Board	
Switch IC	PEX89104
Topology	Synthetic mode for optimized performance of GPU-to-CPU, GPUDirect RDMA NIC, and GPUDirect Storage
System Memory	
Supported DIMM Quantity	12+12 DIMM slots (1DPC)
Supported Type	Supports DDR5 288-pin RDIMM, RDIMM-3DS
Max. Capacity per DIMM	RDIMM: 128GB (2Rx4) RDIMM-3DS: 256GB (2Rx4)
Max. DIMM Frequency	6400MHz
Voltage	1.1V
PCIe Expansion Slot	
PCIe x16	**Rear:** 8 HHHL PCIe5.0 x16 1 FHHL PCIe5.0 x16
Ethernet	
Additional GbE Controller	Intel® i350: 2 RJ45 (1GbE)
System Management	
BMC Controller	ASPEED AST2600
IPMI Dedicated GLAN	1 Realtek RTL8211F for dedicated management GLAN
Graphics	
Controller	ASPEED AST2600
VRAM	DDR4 512MB

Rear I/O	
UID Button/ LED	1 UID button w/ LED
Other Button/ LED	1 PWR button w/ LED, 1 RST button, 1 NMI button, 1 hard drive LED, 1 SYS LED
VGA Port	1 DB15 (VGA)
USB3.2 Gen1 Port	2 Type-A (USB3.2 Gen1)
RJ45	2 RJ45 (1GbE) by Intel® i350, share with front panel 1 Dedicated IPMI, shares with front panel
System BIOS	
BIOS Type	AMI UEFI BIOS; 256Mb (32MB) SPI Flash ROM
BIOS Feature	ASRock Rack Instant Flash, ACPI 6.4 and above compliance wake up events, SMBIOS 3.5.0 and above, Plug and Play (PnP)
Hardware Monitor	
Temperature	CPU, MB, card side temperature sensing
Fan	Fan tachometer CPU quiet fan (allows chassis fan speed auto-adjust by CPU temperature) Fan multi-speed control
Voltage	P0_VDDCR_CPU0, P0_VDDCR_CPU1, P0_VDDCR_SOC, P0_VDD_18_DUAL, P0_VDD_11_S3, P0_VDDIO, P1_VDDCR_CPU0, P1_VDDCR_CPU1, P1_VDDCR_SOC, P1_VDD_18_DUAL, P1_VDD_11_S3, P1_VDDIO, +BAT, +12V, +3VSB, +5VSB
Enviroment	
Temperature	Operation temperature: 10°C ~ 35°C Non operation temperature: -40°C ~ 70°C
Humidity	Non operation humidity: 20% ~ 90% (non condensing)

The functions are supported depending on the type of the server motherboard. Refer to the server motherboard manual for more information.

English

Chapter 2 Server System Overview

This chapter provides diagrams showing the location of important components of the server system.

2.1 System Components

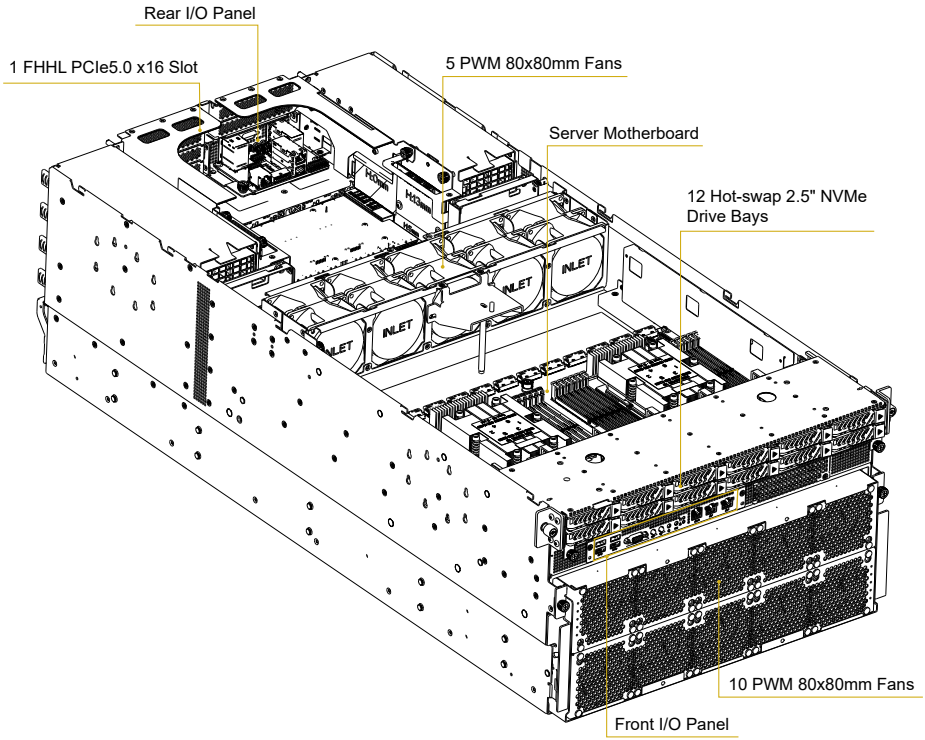

English

2.2 Internal Features

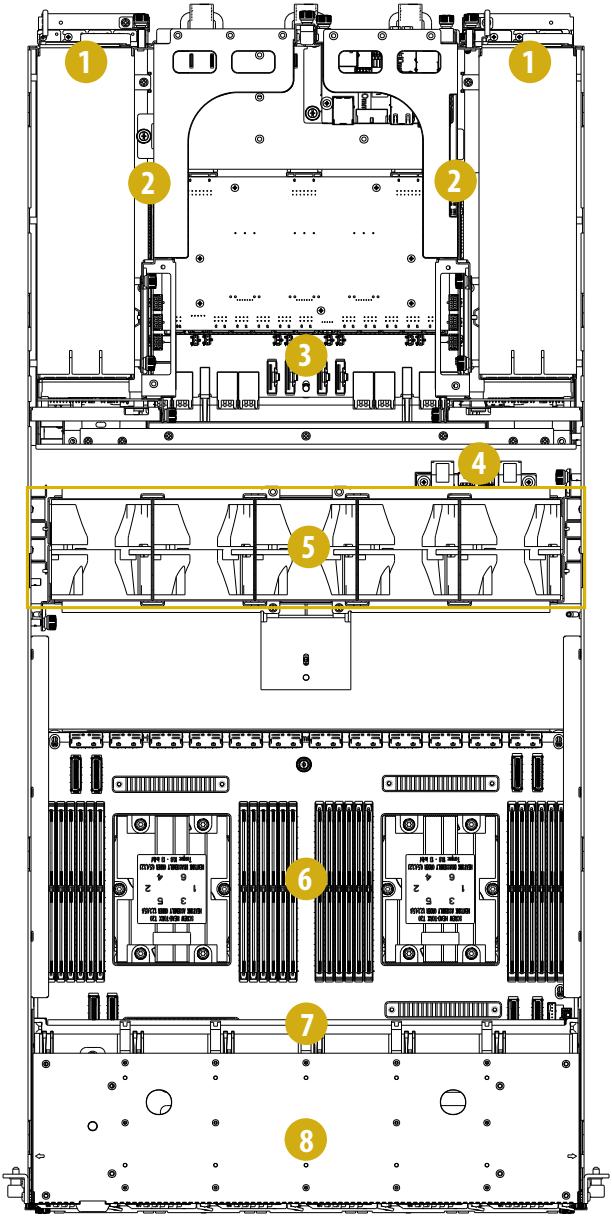

No.	Description
1	**Top:** 6+2 CRPS **Bottom:** 8 HHHL PCIe5.0 x16 slots
2	**Top:** 1 FHHL PCIe5.0 x16 slot Rear I/O panel **Bottom:** 6 PWM 80x80mm rear fans (FAN16 ~ FAN21)
3	Switch board
4	Fan board
5	6 PWM hot-swap 80x80mm top fans (**left-to-right:** FAN11 ~ FAN15)
6	Server motherboard (MB)
7	Back panel board (BPB)
8	**Top:** 12 Hot-swap 2.5" NVMe (PCIe5.0 x4) drive bays Front I/O panel *(depends on the specification of the server motherboard)* **Bottom:** 10 PWM 80x80mm front fans (FAN1 ~ FAN10)

2.3 System Front Panel

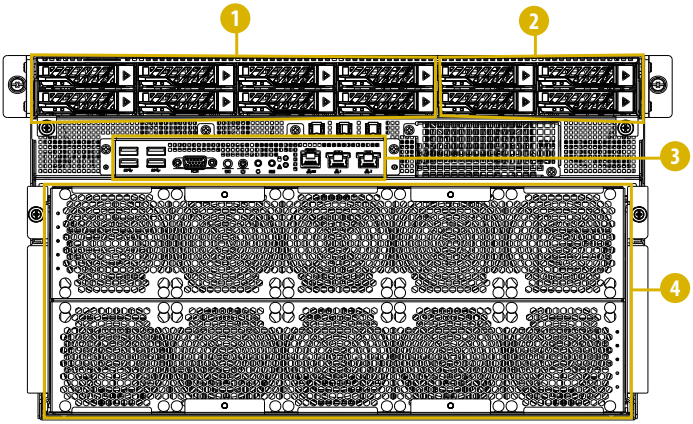

No.	Description
1	8 Hot-swap 2.5" NVMe (PCIe5.0 x4) drive bays from PCIe switch **Top:** NVME2, NVME4, NVME6, NVME8 **Bottom:** NVME1, NVME3, NVME5, NVME7
2	4 Hot-swap 2.5" NVMe (PCIe5.0 x4) drive bays from CPU0 **Top:** NVME10, NVME12 **Bottom:** NVME9, NMVE11
3	Front I/O panel *(depends on the specification of the server motherboard)*
4	10 PWM 80x80mm front fans **Top:** FAN2, FAN4, FAN6, FAN8, FAN10 **Bottom:** FAN1, FAN3, FAN5, FAN7, FAN9

2.4 System Rear Panel

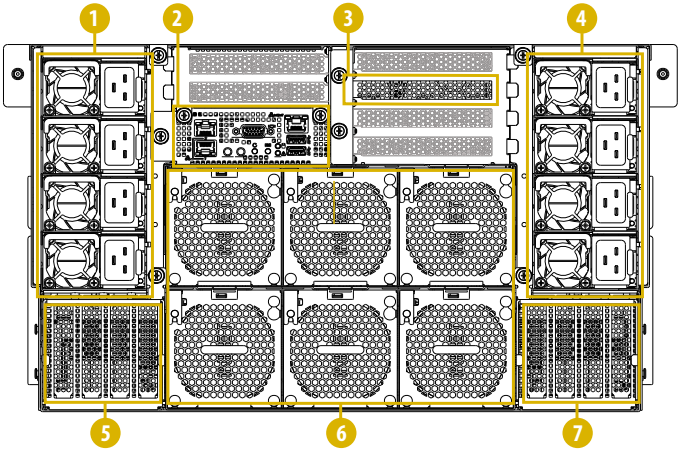

No.	Description
1	4 Power supply units (**top-to-bottom:** PSU_L1 ~ PSU_L4)
2	Rear I/O panel
3	1 FHHL PCIe5.0 x16 slot (Riser_R2)
4	4 Power supply units (**top-to-bottom:** PSU_R1 ~ PSU_R4)
5	4 HHHL PCIe5.0 x16 slots (PCIE8 ~ PCIE5)
6	6 PWM 80x80mm rear fans **Top:** FAN21 ~ FAN19 **Bottom:** FAN18 ~ FAN16
7	4 HHHL PCIe5.0 x16 slots (PCIE4 ~ PCIE1)

2.5 I/O Panel

Front I/O Panel

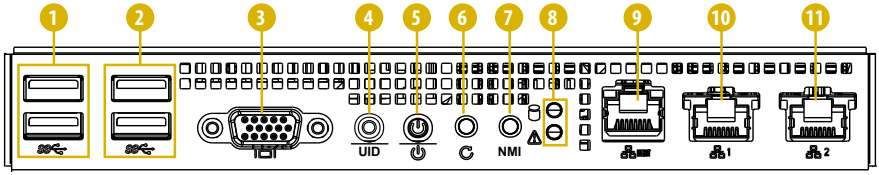

No.	Description
1	2 Type-A (USB3.2 Gen1) ports (USB3_1_2)
2	2 Type-A (USB3.2 Gen1) ports (USB3_3_4)
3	1 DB15 (VGA) port
4	1 UID button w/ LED
5	1 Power button w/ LED
6	1 Reset button
7	1 NMI button
8	**Upper:** 1 Hard drive activity LED **Lower:** 1 System fault LED
9	1 Dedicated IPMI LAN port
10	1 RJ45 (1GbE) LAN port (LAN1)
11	1 RJ45 (1GbE) LAN port (LAN2)

Rear I/O Panel

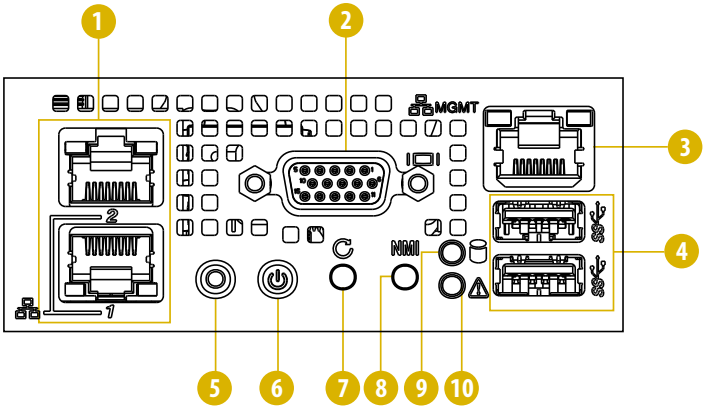

No.	Description
1	2 RJ45 (1GbE) LAN ports (LAN1, LAN2)
2	1 DB15 (VGA) port
3	1 Dedicated IPMI LAN port
4	2 Type-A (USB3.2 Gen1) ports
5	1 UID button w/ LED
6	1 Power button w/ LED
7	1 Reset button
8	1 NMI button
9	1 Hard drive activity LED
10	1 System fault LED

UID Button

Press the UID button to toggle the front (MB) UID LED and the rear UID LED on and off. Use this button to locate the server working on behind a rack of servers.

1. Press and hold the UID button for 4 seconds, the BMC will trigger an external reset.
2. Press and hold the UID button for 10 seconds, the BMC will reset and load default values.

English

Power Button

Press the power switch button to toggle the system power on and standby/sleep modes. To remove all power from the system completely, disconnect the power cord from the server.

Reset Button

When the system is completely unresponsive, press the system reset button to reboot the server without shutting it off and initialize the system.

NMI (Nonmaskable Interrupt) Button

Press the NMI button with a paper clip or pin to generate a nonmaskable interrupt and to put the server in a halt state for examination.

Status LED Definitions

UID LED	
Status	**Description**
Off	System identification is disabled.
Blue	System identification is active.

Power LED	
Status	**Description**
Off	Power off
Green	Power on

Hard Drive Activity LED	
Status	**Description**
Off	Hard drive inactive
Blinking Green	Hard drive active

System Fault LED	
Status	**Description**
Off	BMC not alert
Red	BMC alert

There is an LED on each side of IPMI LAN port. Please refer to the table below for the LAN port LED indications.

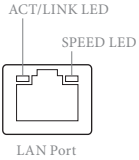

IPMI LAN Port LED Indications

Activity / Link LED		Speed LED	
Status	**Description**	**Status**	**Description**
Off	No link	Off	No link
Blinking Yellow	Data activity	Orange	100Mbps connection
Green	Link	Green	1Gbps connection

There is an LED on each side of 1G LAN port. Please refer to the table below for the LAN port LED indications.

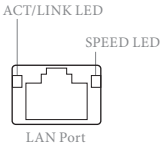

1G LAN Port (LAN1, LAN2) LED Indications

Activity / Link LED		Speed LED	
Status	**Description**	**Status**	**Description**
Off	No link	Off	10Mbps connection or no link
Blinking Yellow	Data activity	Orange	100Mbps connection
Green	Link	Green	1Gbps connection

2.6 LED

PSU LED

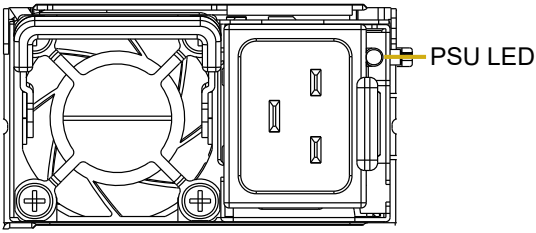

PSU Status LED	
Status	**Description**
Green	Normal work; output ON and OK
Blinking Green at 0.5Hz	AC Present Only 12VSB on (PS off) or PSU in Smart Redundant state
Amber	Module fault/protection in operating mode (failure, OCP, OVP, Fan Fail, OTP, UVP) AC cord unplugged
Blinking Amber at 0.5Hz	Warning (high temp, high power, high current, slow fan)

Rear Fan

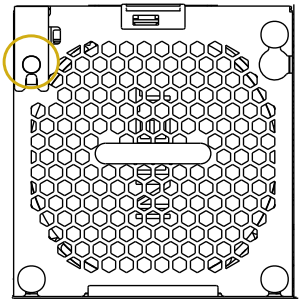

Status	Description
Off	Normal or no power
Red	Abnormal

Hard Drive Tray LED

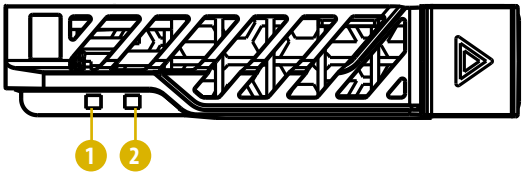

No.	Description
1	Hard drive tray status LED
2	Hard drive tray activity LED

LED Definitions

Status (No. 1)	Activity (No. 2)	Description
Off	Off	Drive not present
Blue	Green	Drive present but not active
Blue	Blinking Green at 4Hz	Drive present and active
Blinking Blue at 4Hz	Green	Locate
Red	Green	Fail
Blinking Red at 1Hz	Blinking Green at 4Hz	Rebuild

Chapter 3 Hardware Installation and Maintenance

This chapter helps user to assemble the chassis and install components.

Before You Begin

Before working with the server, pay close attention to the "Important Safety Instructions" at the beginning of this manual.

Ensure the motherboard battery is installed before unplugging the power cord or installing/removing the motherboard. Failure to follow this precaution may result in physical injury or damage to motherboard components.

1. Make sure the server is powered off.
   Power down the server if it is still running.
   (1) Press the Power button to power off the server from full-power mode to standby-power (sleep) mode. The Power LED at the front turns from solid green to blinking green.
   (2) Disconnect the power cord first from the AC outlet and then from the server.
   The power LED turns off.

The server is not completely powered down when pressing the Power button on the front panel. The Power button lets the server toggle between Power On and Standby (Sleep) modes. Some internal circuitry remain active in the Standby mode. To remove all power from the system completely, be sure to disconnect the power cord from the server.

2. Ensure having a clean and stable working environment. Avoid dust and dirt because contaminants may cause malfunctions.
3. Ground properly before touching any system component. A discharge of static electricity may damage components. Wear a grounded wrist strap if available.

1. *Some components are already pre-installed. Simply properly connect the relavant cables before or after installation.*
2. *Refer to the server motherboard user manual for instructions on how to install server mother-board components.*

English

3.1 Server Top cover

Removing the Server Front Top Cover

1. Before removing the top covers, power off the server and unplug the power cord.
2. The system must be operated with the chassis top covers installed to ensure proper cooling.
3. Front top cover and rear top cover can be removed and installed separately.

1. Loosen the screw on the locking tab and press the button to unlock the front top cover.
2. Push the front top cover toward the FRONT of the chassis to release it from the locked position. Lift up and remove the cover.

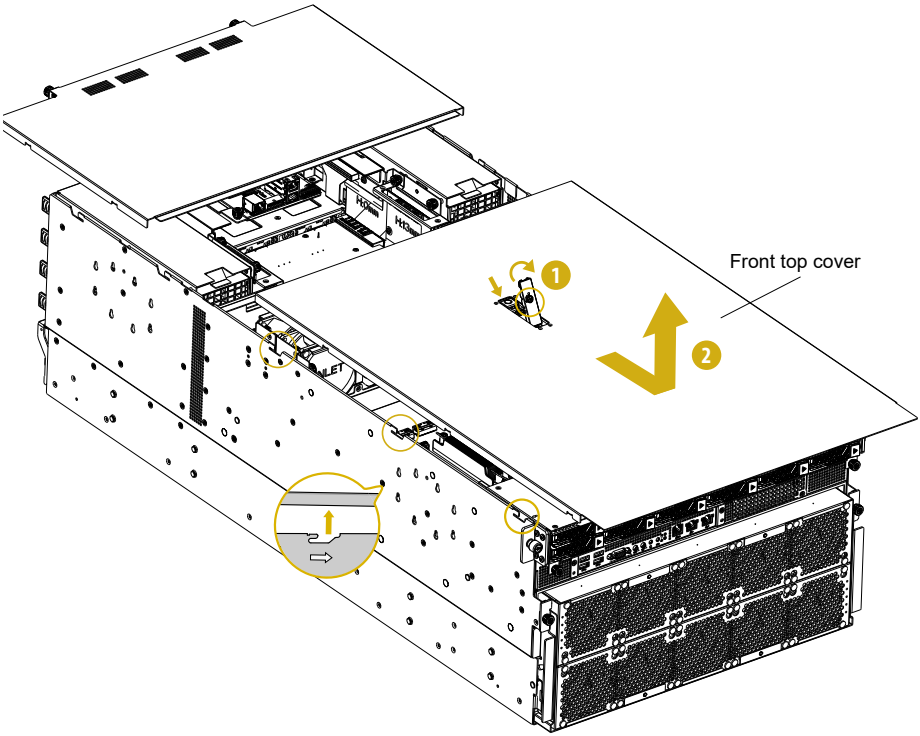

Installing the Server Front Top Cover

1. Lower the front top cover on the chassis, making sure the side latches align with the cutouts. Slide the cover toward the REAR of the chassis.
2. Press down the locking tab and tighten the screw to secure the cover.

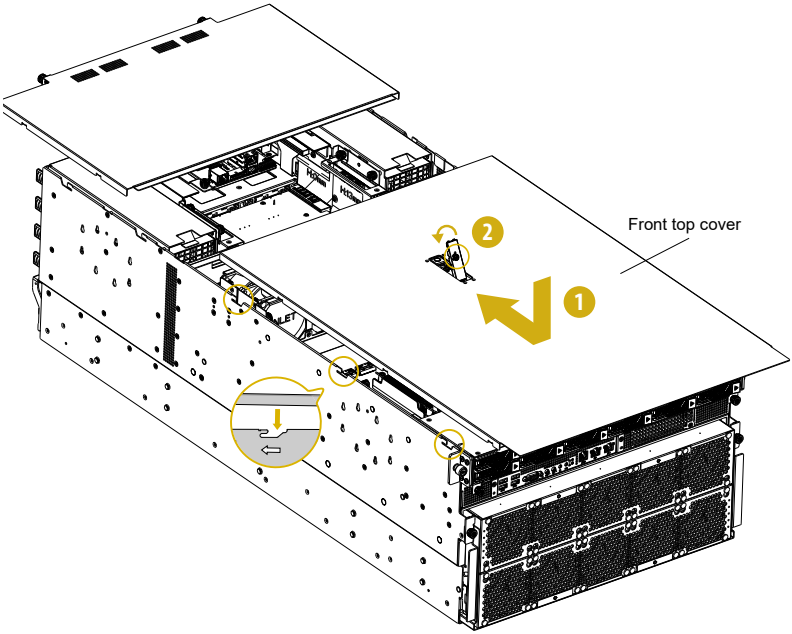

Removing the Server Rear Top Cover

1. Hand-release the thumbscrews on the rear side of the chassis.
2. Push the rear top cover toward the REAR of the chassis to release it from the locked position. Lift up and remove the cover.

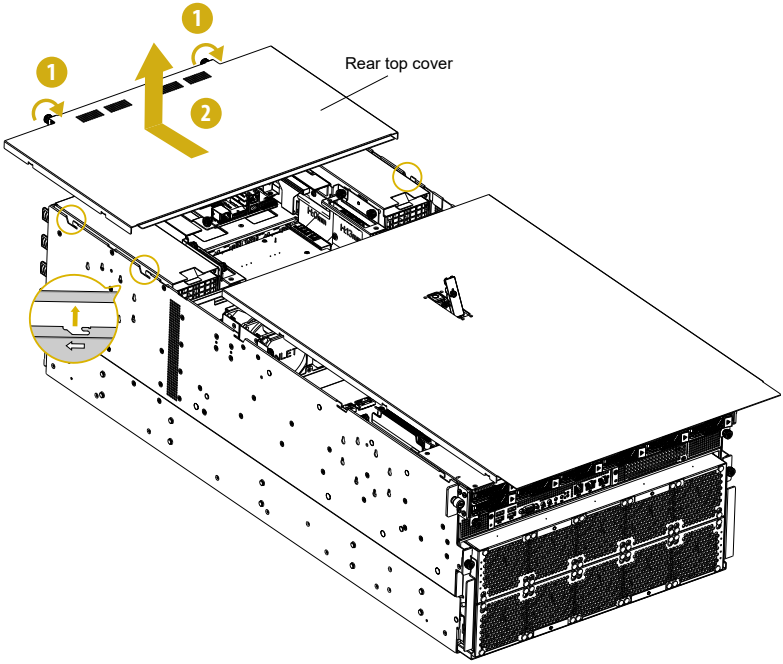

Installing the Server Rear Top over

1. Lower the rear top cover on the chassis, making sure the side latches align with the cutouts. Slide the cover toward the FRONT of the chassis.
2. Hand-tighten the thumbscrews on the rear side of the chassis.

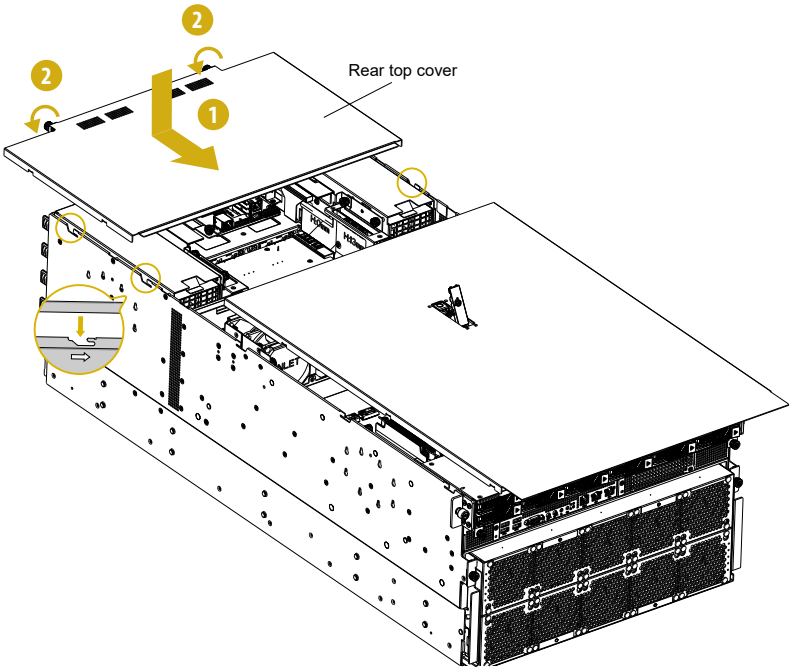

3.2 Hard Drive

Removing Hard Drive Tray from the Chassis

1. Press the locking lever latch.
2. Open the lever.

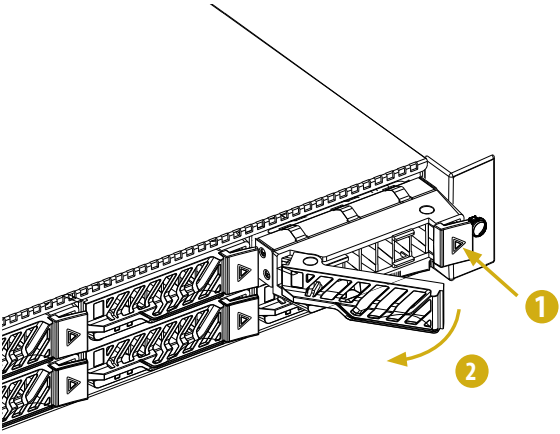

3. Pull the drive tray out.

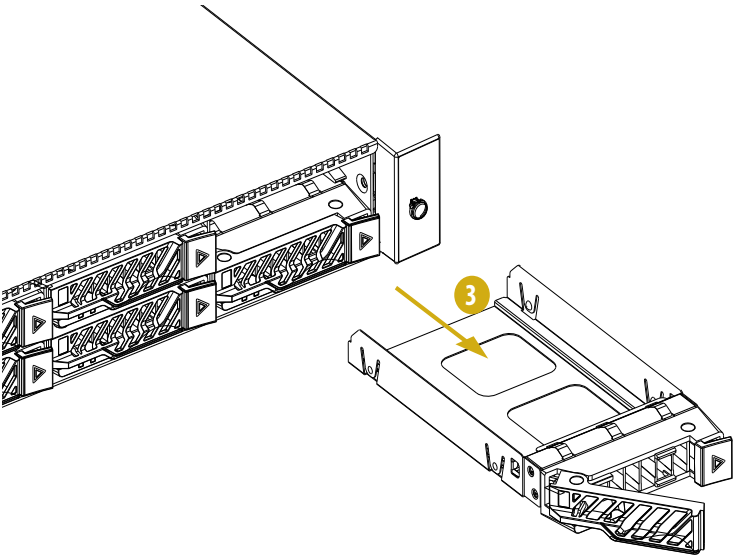

Installing 2.5" Hard Drive

1. Place the hard drive into the tray with printed circuit board side facing down.
2. Use the bumps on both sides of tray to secure the hard drive.
3. Slide the tray into the hard drive bay.
4. Push in the locking lever to lock the tray in place.

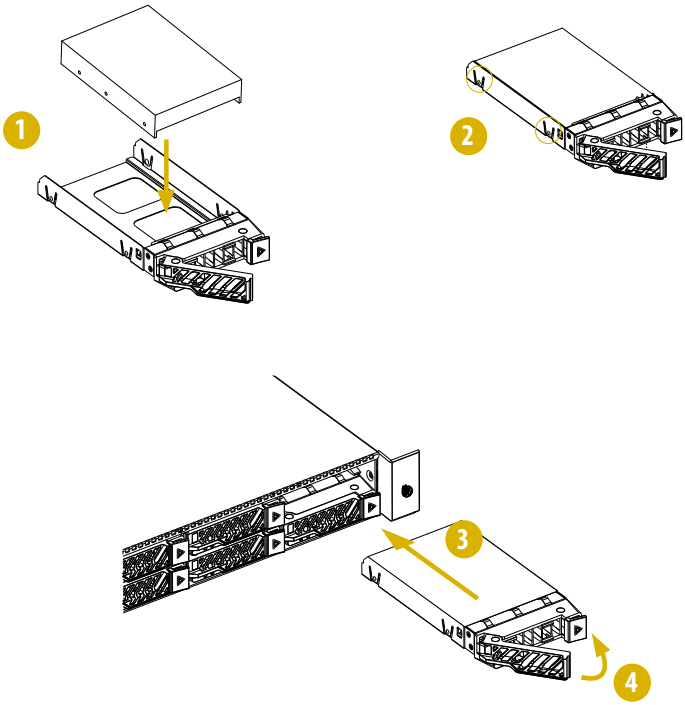

3.3 Power Supply

The 6U8M-TURIN2 SYN MI325X system can accommodate 8 power supply units in the bay at the rear of the chassis. Each unit provides up to 3000W of power. 6 PSUs are required for full load operation, with the other 2 PSUs purely as redundant, load-sharing backup. 2 PSUs can be removed without affecting system operation.

Removing the Power Supply Unit

1. Before replacing the power supply, power off the server, unplug the power cord, and disconnect all wiring from the power supply.
2. The redundant system does not require powering down the server.

1. Hold onto the power supply handle while pressing the locking lever towards the power supply handle.

   Note: The illustration is for references only. The actual PSU type may be slightly different by models.

2. Pull out the power supply from the chassis.

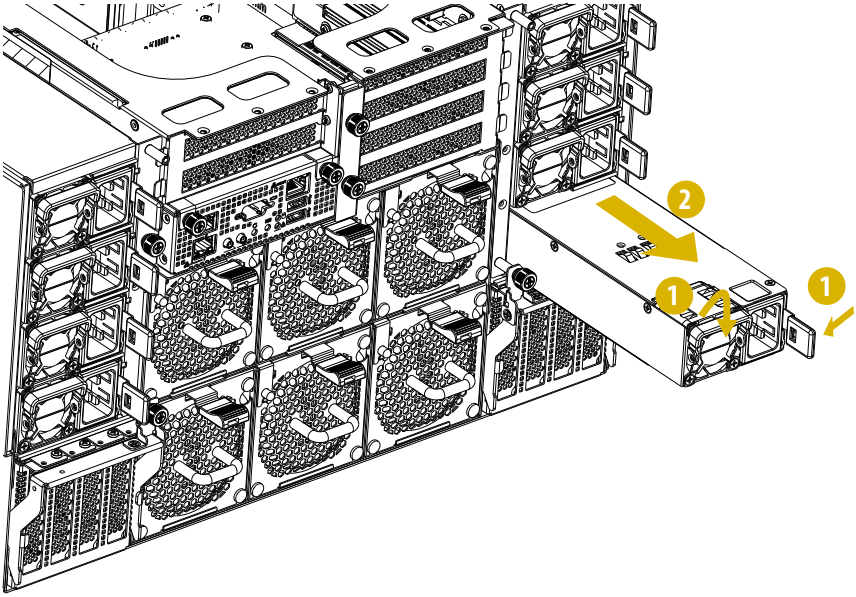

Installing the Power Supply Unit

1. Align the PSU with the power supply bay.
2. Carefully slide the PSU all the way into the power supply bay until it clicks into place.

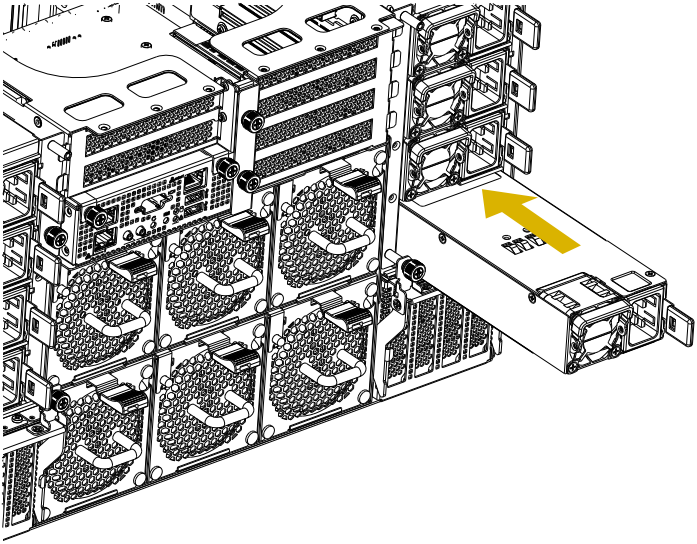

3.4 System Fan

Replacing the Top Fan

1. Hand-release the thumbscrew on the side of the fan bar.
2. Lift up the fan bar.
3. Remove the failed fan.
4. Align the mounting holes on the replacement fan with the fan mounts on the fan bar. Gently place the fan onto the mounts. Make sure the fan is well seated.
5. Place the fan bar into the chassis.
6. Hand-tighten the thumbscrew to secure the fan bar in place.

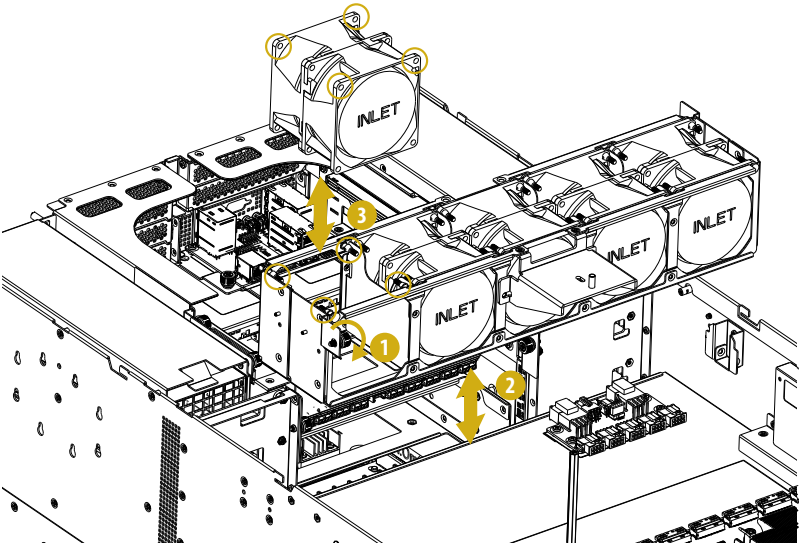

Replacing the Rear Fan

1. Hold onto the fan handle while pressing the locking lever towards the fan handle.
2. Pull out the fan from the chassis.
3. Gently place the replacement fan into the bay.
4. Make sure the fan is well seated.

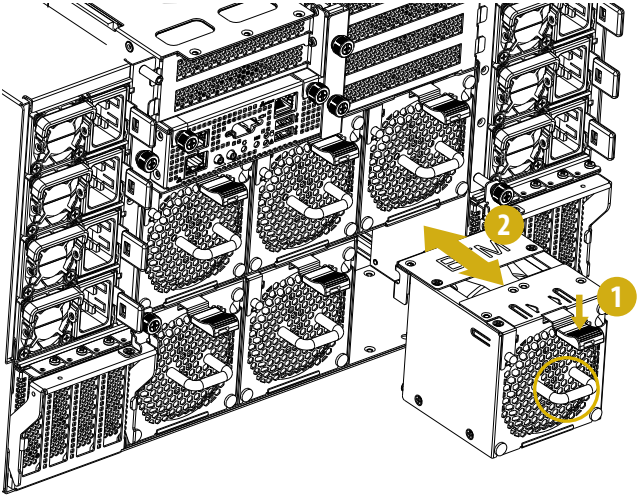

3.5 Add-in Card

1. *Install an add-in card to the chassis only when having a riser-card installed on the server motherboard.*
2. *Before installing the add-in card, power off the server and unplug the power cord.*

Installing the Add-in Card

FHHL PCIe5.0 x16 (right)

1. Hand-release 4 thumbscrews securing the riser-card bracket on the chassis.
2. Lift up the riser-card bracket.

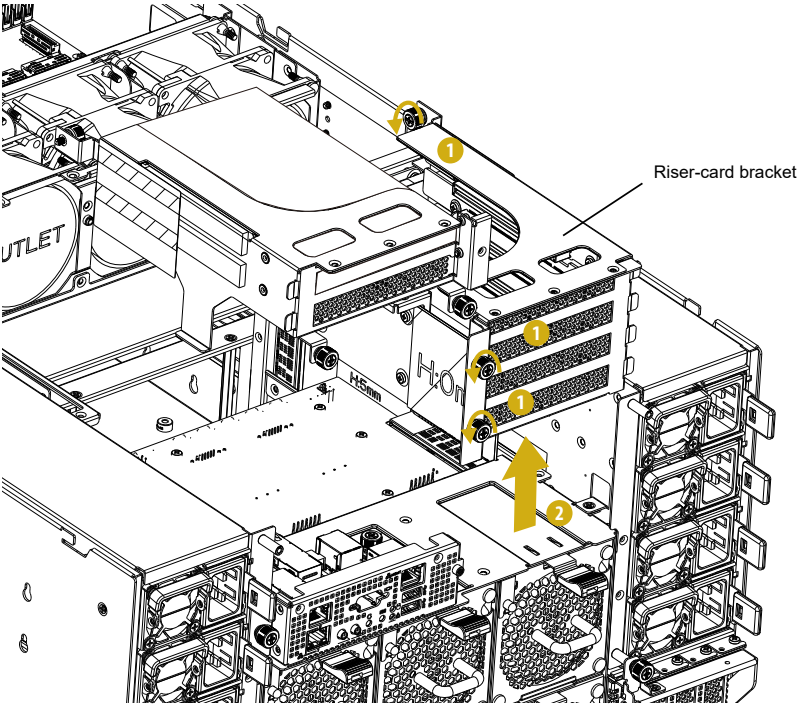

3. Remove the screw securing the blanking plate on the bracket.
4. Slide the blanking plate out sideways.

Notes:
1. Remove two screws and two blanking plates when installing a dual-slot PCIe/GPU card.
2. The illustration is for references only. The actual location may be slightly different by models.

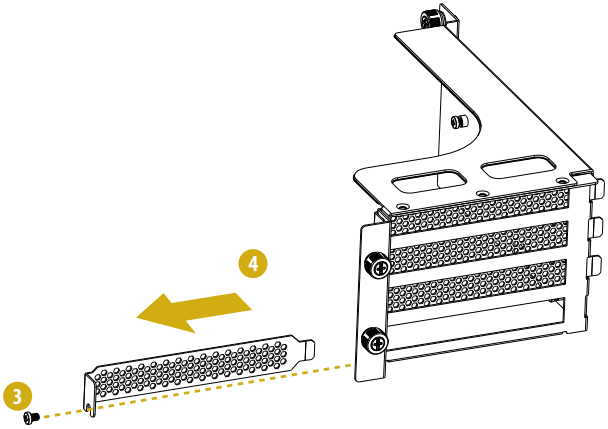

5. Install the add-in card to the riser-card bracket.
6. Secure the add-in card to the bracket with the screw.

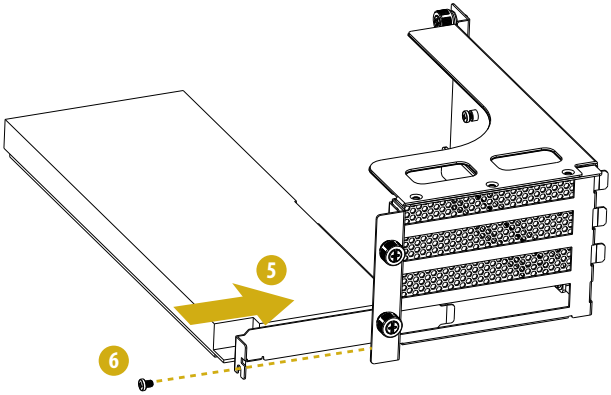

7. Align the riser-card assembly with the opening of the chassis and put it in place.
8. Hand-tighten 4 thumbscrews to secure the assembly to the chassis.

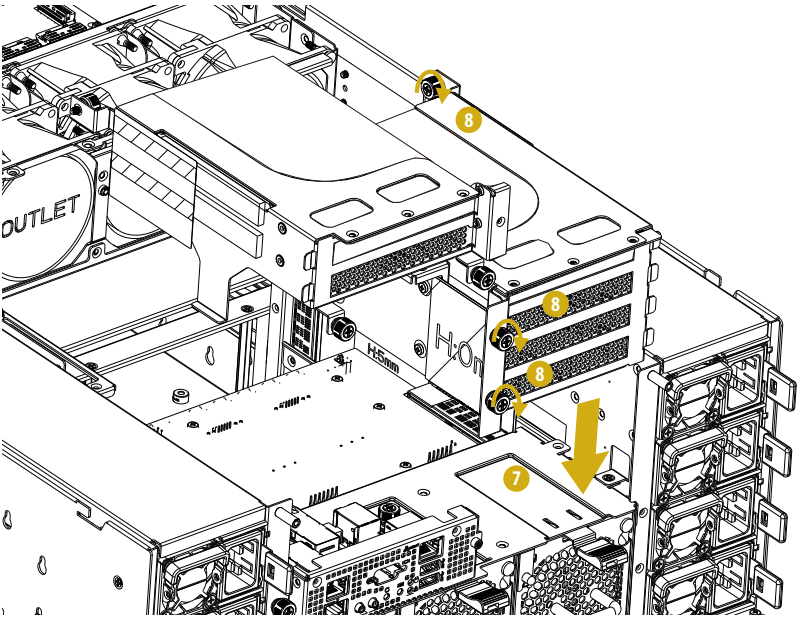

HHHL PCIe5.0 x16

1. Hand-release the thumbscrew securing the riser-card bracket on the chassis.
2. Pull the latch down.
3. Pull to remove the riser-card bracket from the chassis.

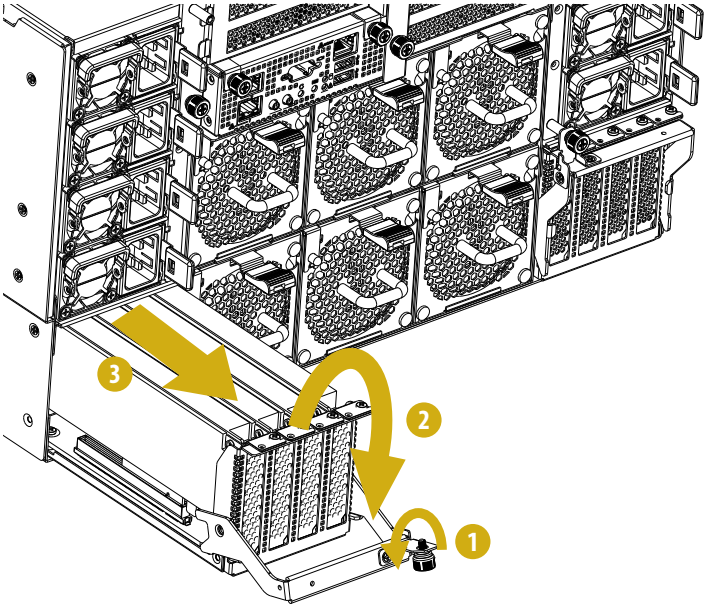

4. Remove the screw securing the blanking plate on the bracket.
5. Slide the blanking plate out sideways.

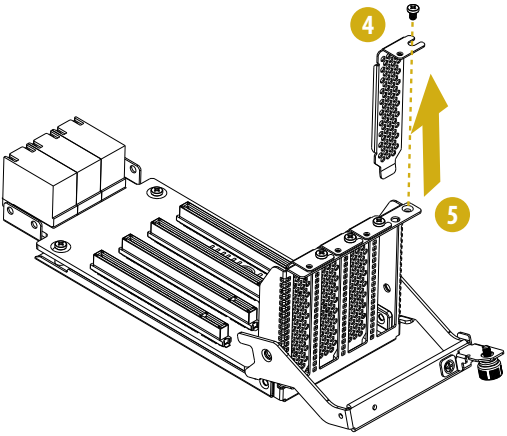

6. Slot the add-in card to the riser-card board.
7. Secure the add-in card to the bracket with the screw.

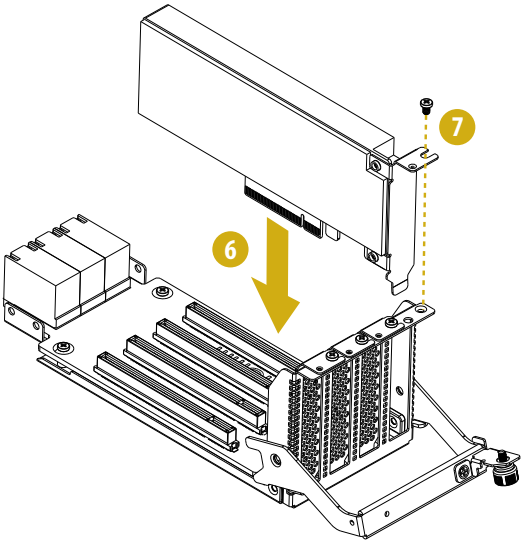

8. Align the riser-card assembly with the opening of the chassis and slide it in place.
9. Lift the latch up to lock the add-in card with bracket.
10. Hand-tighten the thumbscrew to secure the assembly to the chassis.

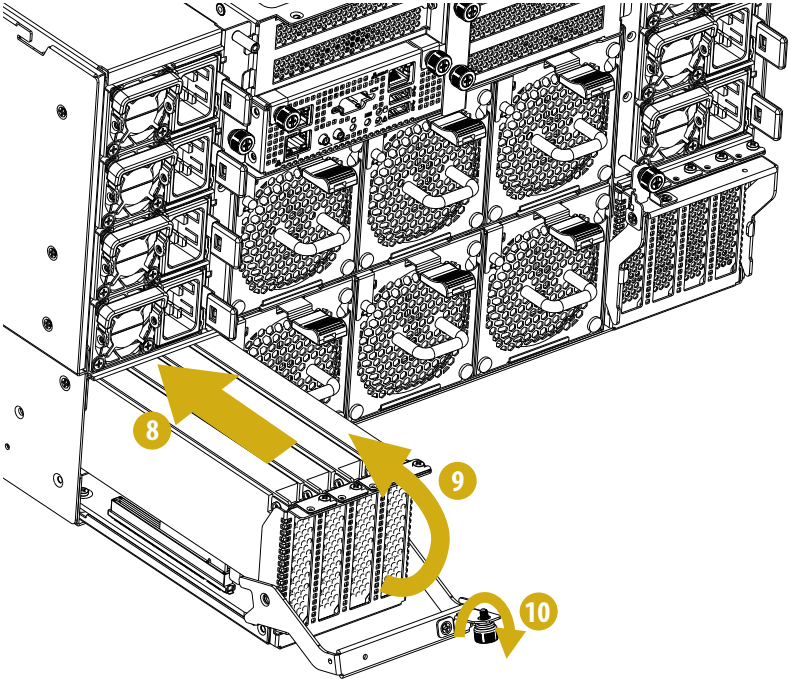

3.6 GPU Tray

Opening the GPU Tray

1. Hand-release the thumbscrews on both sides of the GPU tray to unlock the tray latches.
2. Pull to remove the GPU tray from the chassis.

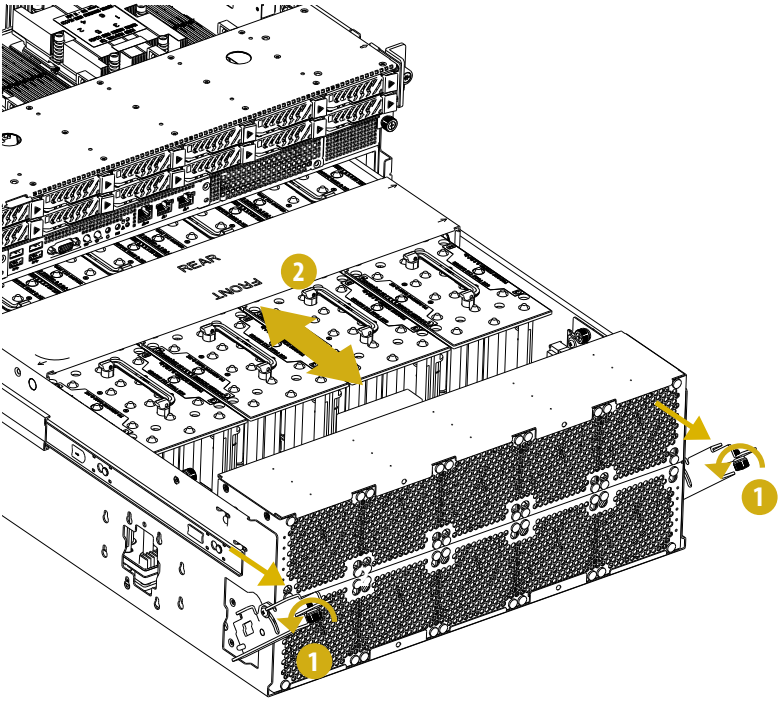

Chapter 4 Server Motherboard (TURIN2D24G-2L+/500W)

4.1 Layout

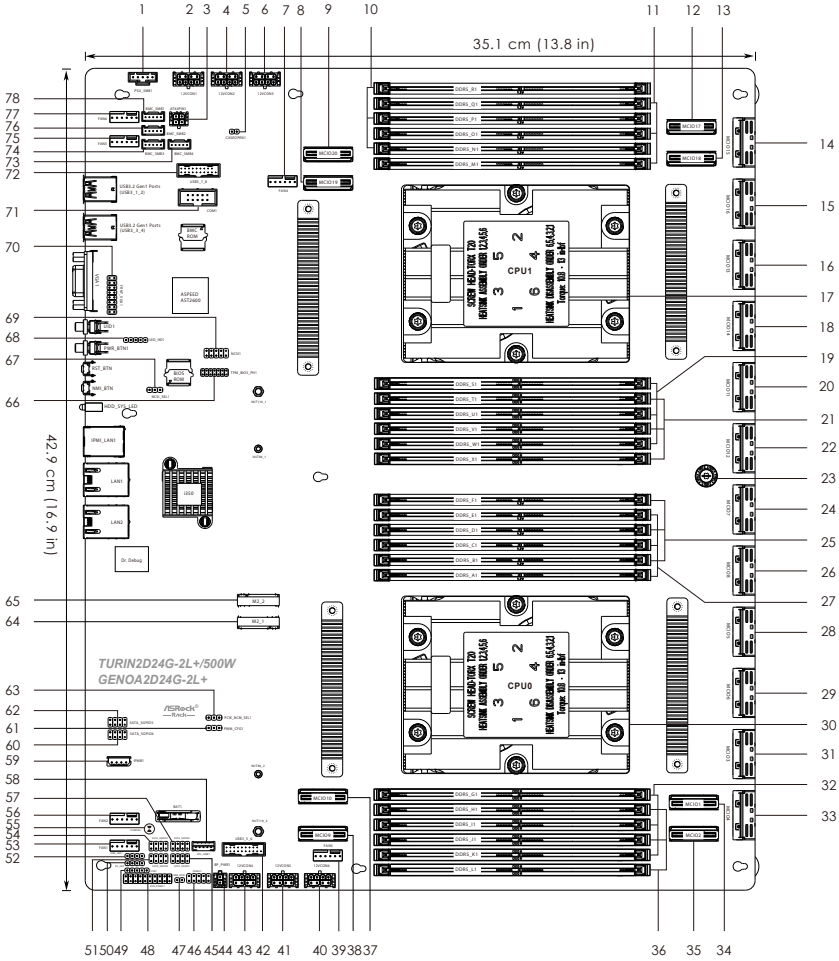

No.	Description
1	PSU SMBus Header (PSU_SMB1)
2	ATX 12V Power Connector (12VCON1)
3	Micro-Fit Power Connector (ATX4PIN1)
4	ATX 12V Power Connector (12VCON2)
5	Chassis Intrusion Header (CASEOPEN1)
6	ATX 12V Power Connector (12VCON3)
7	System Fan Connector (FAN4)
8	Mini Cool Edge IO Connector (MCIO19)
9	Mini Cool Edge IO Connector (MCIO20)
10	3 x 288-pin DDR5 DIMM Slots (DDR5_N1, DDR5_P1, DDR5_R1)
11	3 x 288-pin DDR5 DIMM Slots (DDR5_M1, DDR5_O1, DDR5_Q1)
12	Mini Cool Edge IO Connector (MCIO17)
13	Mini Cool Edge IO Connector (MCIO18)
14	Mini Cool Edge IO Connector (MCIO15)
15	Mini Cool Edge IO Connector (MCIO16)
16	Mini Cool Edge IO Connector (MCIO13)
17	AMD Socket SP5 (SM-LGA-6096) (CPU1)
18	Mini Cool Edge IO Connector (MCIO14)
19	3 x 288-pin DDR5 DIMM Slots (DDR5_S1, DDR5_U1, DDR5_W1)
20	Mini Cool Edge IO Connector (MCIO11)
21	3 x 288-pin DDR5 DIMM Slots (DDR5_T1, DDR5_V1, DDR5_X1)
22	Mini Cool Edge IO Connector (MCIO12)
23	Thumbscrew
24	Mini Cool Edge IO Connector (MCIO7)
25	3 x 288-pin DDR5 DIMM Slots (DDR5_B1, DDR5_D1, DDR5_F1)
26	Mini Cool Edge IO Connector (MCIO8)
27	3 x 288-pin DDR5 DIMM Slots (DDR5_A1, DDR5_C1, DDR5_E1)
28	Mini Cool Edge IO Connector (MCIO5)
29	Mini Cool Edge IO Connector (MCIO6)
30	AMD Socket SP5 (SM-LGA-6096) (CPU0)
31	Mini Cool Edge IO Connector (MCIO3)
32	3 x 288-pin DDR5 DIMM Slots (DDR5_G1, DDR5_I1, DDR5_K1)
33	Mini Cool Edge IO Connector (MCIO4)
34	Mini Cool Edge IO Connector (MCIO1)

No.	Description
35	Mini Cool Edge IO Connector (MCIO2)
36	3 x 288-pin DDR5 DIMM Slots (DDR5_H1, DDR5_J1, DDR5_L1)
37	Mini Cool Edge IO Connector (MCIO10)
38	Mini Cool Edge IO Connector (MCIO9)
39	System Fan Connector (FAN3)
40	ATX 12V Power Connector (12VCON6)
41	ATX 12V Power Connector (12VCON5)
42	USB 3.2 Gen1 Header (USB3_5_6)
43	ATX 12V Power Connector (12VCON4)
44	System Power Connector (BP_PWR1)
45	SATA SGPIO Connector (SATA_SGPIO1)
46	System Panel Header (PANEL1)
47	Non Maskable Interrupt Button (NMI_BTN1)
48	Auxiliary Panel Header (AUX_PANEL1)
49	Liquid Crystal Module Header (LCM1)
50	Rear Panel LAN LED (RL_LED)
51	SATA SGPIO Connector (SATA_SGPIO3)
52	IPMI LAN LED Header (IPMI_LED1)
53	System Fan Connector (FAN1)
54	SATA SGPIO Connector (SATA_SGPIO4)
55	Clear CMOS Pad (CLRMOS1)
56	System Fan Connector (FAN2)
57	SATA SGPIO Connector (SATA_SGPIO2)
58	Backplane PCI Express Hot-Plug Connector (CPU_HSBP1)
59	Intelligent Platform Management Bus Header (IPMB1)
60	SATA SGPIO Connector (SATA_SGPIO6)
61	PWM Configuration Header (PWM_CFG1)
62	SATA SGPIO Connector (SATA_SGPIO5)
63	PCIE Signal Source Selection Jumper (PCIE_BCM_SEL1)
64	M.2 Socket (M2_1) (Type 2280/22110)
65	M.2 Socket (M2_2) (Type 2280/22110)
66	SPI TPM Header (TPM_BIOS_PH1)
67	NCSI Mode Jumper (NCSI_SEL1)
68	UID Button Header (UID_HD1)

No.	Description
69	NCSI Header (NCSI1)
70	Front VGA Header (FRNT_VGA1)
71	COM Port Header (COM1)
72	USB 3.2 Gen1 Header (USB3_7_8)
73	BMC SMBus Header (BMC_SMB4)
74	BMC SMBus Header (BMC_SMB3)
75	System Fan Connector (FAN5)
76	BMC SMBus Header (BMC_SMB2)
77	System Fan Connector (FAN6)
78	BMC SMBus Header (BMC_SMB1)

4.2 Block Diagram

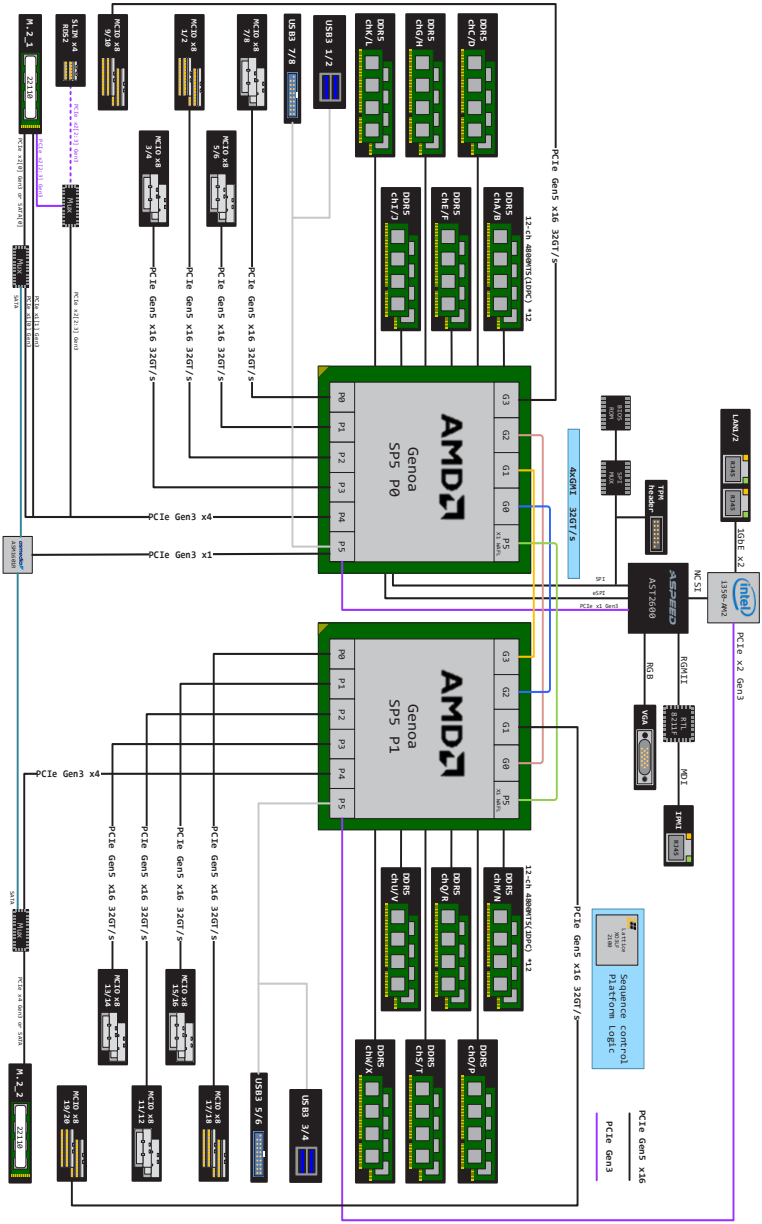

English

4.3 Installing the CPU and Heatsink (LGA 6096 Socket)

1. *Before inserting the CPU into the socket, check if the PnP cap is on the socket, if the CPU surface is unclean, or if there are any bent pins in the socket. Do not force to insert the CPU into the socket if above situation is found. Otherwise, the CPU will be seriously damaged.*
2. *Unplug all power cables before installing the CPU.*

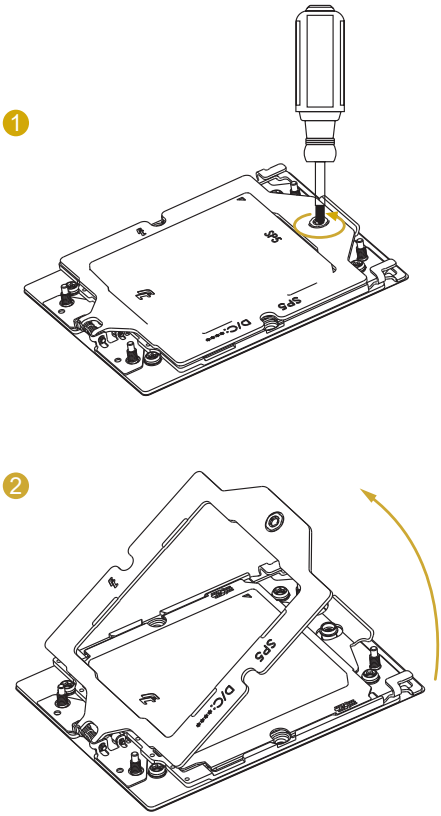

3

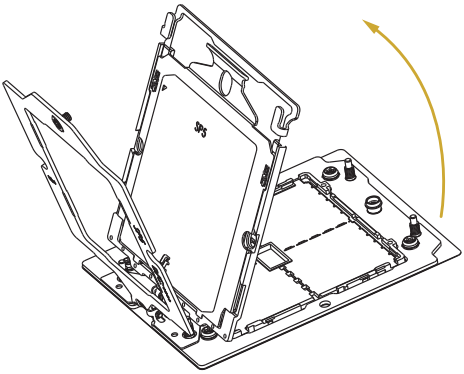

4

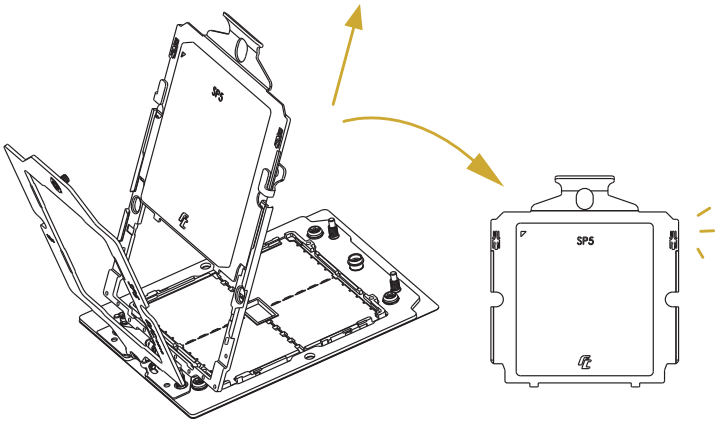

5

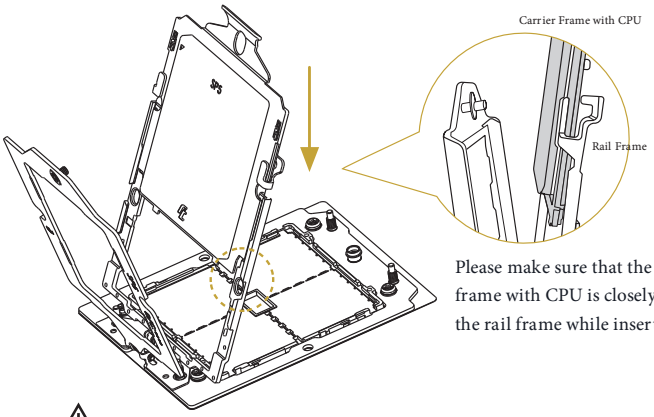

Please make sure that the carrier frame with CPU is closely attached to the rail frame while inserting it.

⚠ Install the carrier frame with CPU. Don't separate them.

6

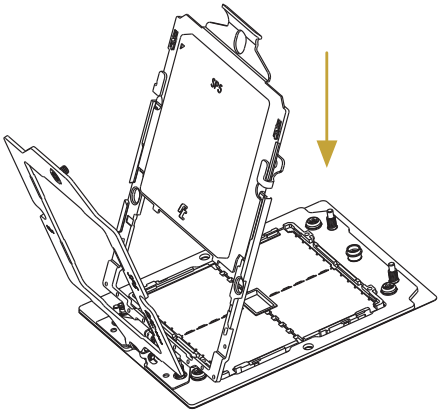

7

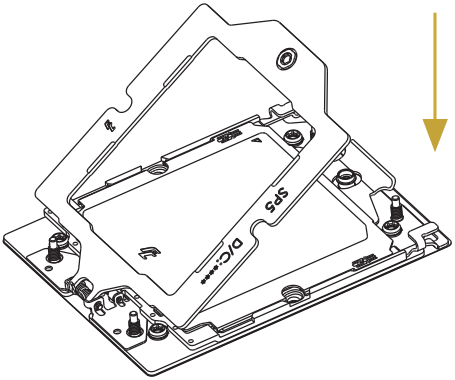

8

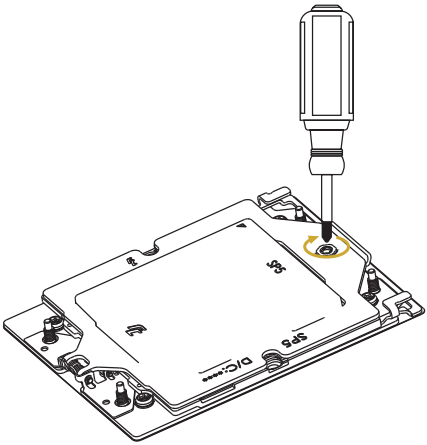

9

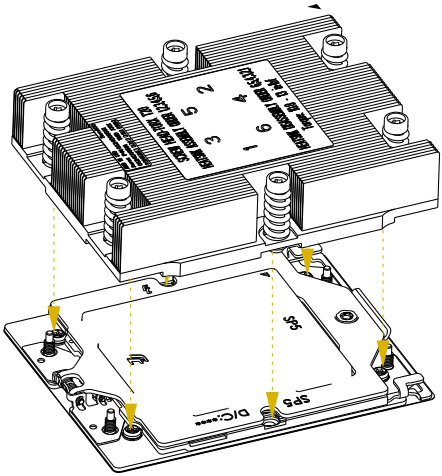

10

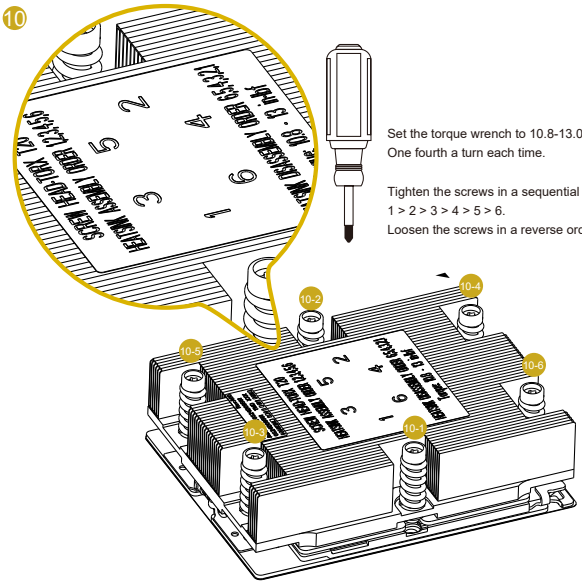

Set the torque wrench to 10.8-13.0 in-lb.
One fourth a turn each time.

Tighten the screws in a sequential order
1 > 2 > 3 > 4 > 5 > 6.
Loosen the screws in a reverse order.

4.4 Installing the Memory Modules (DIMM)

The DIMM only fits in one correct orientation. It will cause permanent damage to the server motherboard and the DIMM if forcing the DIMM into the slot at incorrect orientation. For more information about DIMM installation, refer to the server motherboard user manual.

1

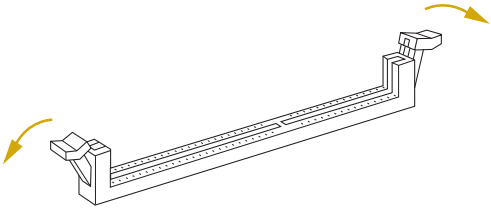

2

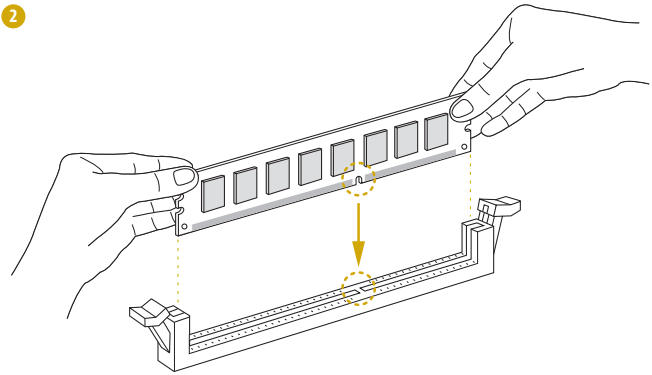

3

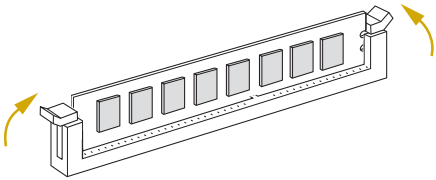

English

Appendix

Installing the Server in a Rack

The section describes how to rackmount the server with slide rail assembly.

The rails installation instructions in this manual are example only, the actual rail assembly procedure may differ slightly.

The rail assembly consists of outer, middle and inner rail.

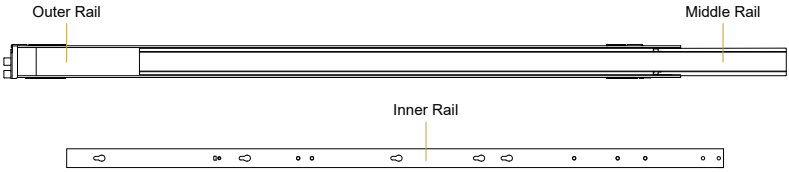

Some slide rails are labeled with either L or R, please identify prior to rail installation. Install the rail labeled with L on the left side of rack, and the rail labeled with R on the right side.

Remove the inner rail

1. Pull the inner rail out.
2. Push locking plate to remove the inner rail from the rail assembly.

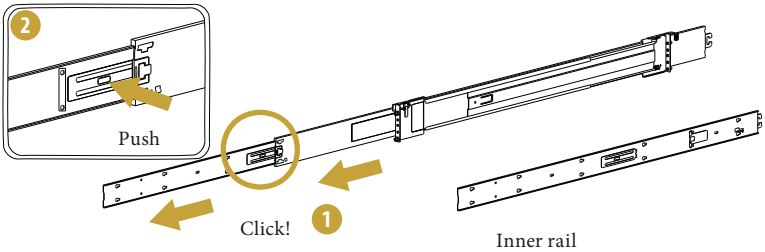

3. Push tab to slide the middle rail.

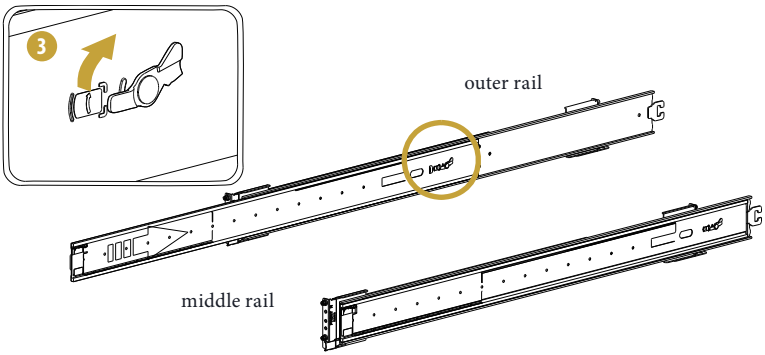

Install inner rail onto the chassis

For safety concem, user can fasten the screw (screw hole A as below picture) on the end of inner member while assmbling on the chassis.

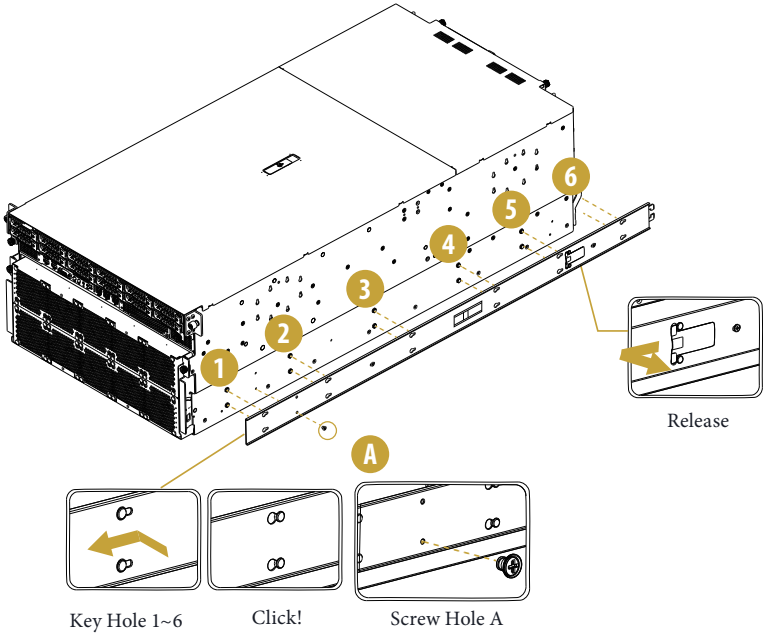

Install the inner member onto the chassis by this direction.

Install outer rail onto the rack post

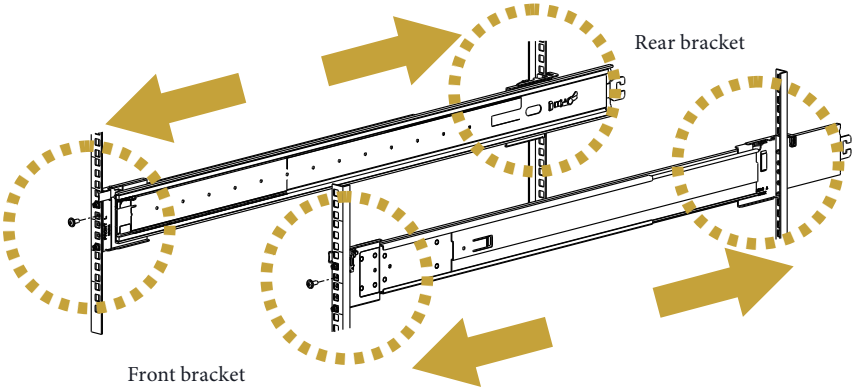

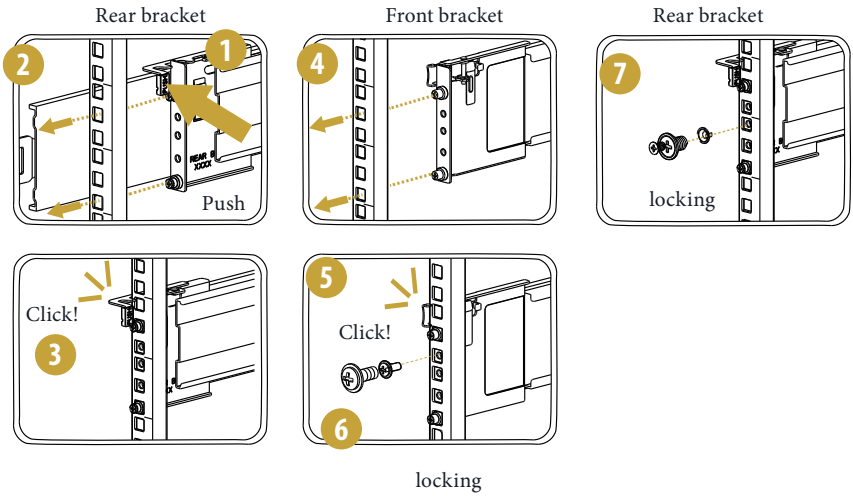

Mount the server in rack

1. Pull out middle rail and confirm if it's locked (Click!).
2. Make sure ball bearing retaniner is located at the front of the middle rail.
3. Aim the rear end of inner rail to middle rail, Horizontally insert the chassis to midde and out rail.
4. When chassis is locked, push release tab on both sides and continue sliding the chassis to the rack.
5. Fasten chassis ear screws and secure the rail with shipping screws.

At least two people are required for chassis installation.

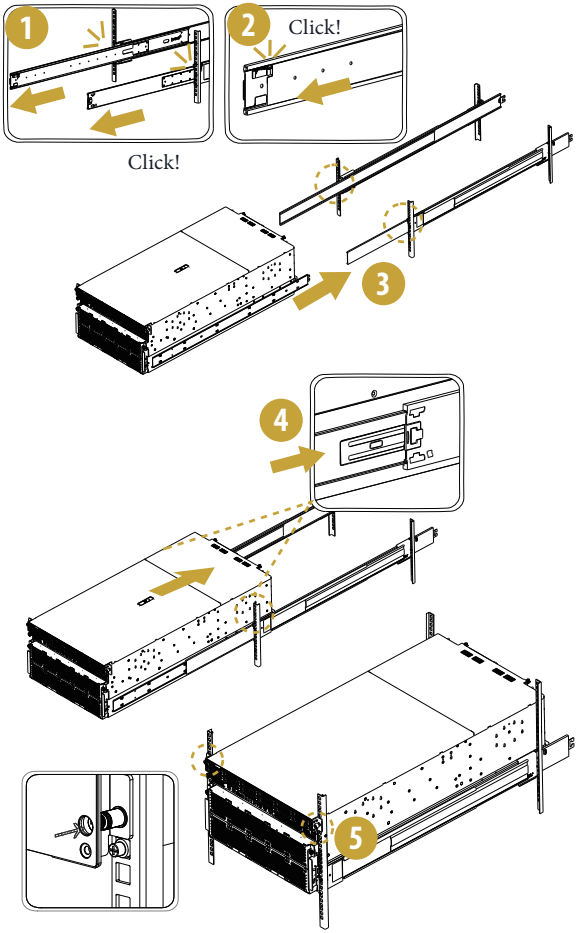

Contact Information

Contact ASRock Rack or want to know more about ASRock Rack, you're welcome to visit ASRock Rack's website at http://www.asrockrack.com; or contact the dealer for further information. For technical questions, please submit a support request form at https://event.asrockrack.com/tsd.asp

ASRock Rack Incorporation

e-mail: ASRockRack_sales@asrockrack.com

ASRock Rack EUROPE B.V.

Bijsterhuizen 11-11
6546 AR Nijmegen
The Netherlands
Phone: +31-24-345-44-33

ASRock Rack America, Inc.

4331 Eucalyptus Ave, Chino, CA 91710 U.S.A.
Phone: +1-909-590-8308
Fax: +1-909-590-1026